MARICOPA COUNTY
OFFICIAL PARCEL MAP
STATE OF ARIZONA

PT. SECTION 24 T02N R03W

MAP ID # 831 - 24 - 04 - 04
TOWNSHIP & RANGE GRID NUMBER / SECTION NUMBER / 1/4 SECTION NUMBER / 1/4 1/4 SECTION NUMBER

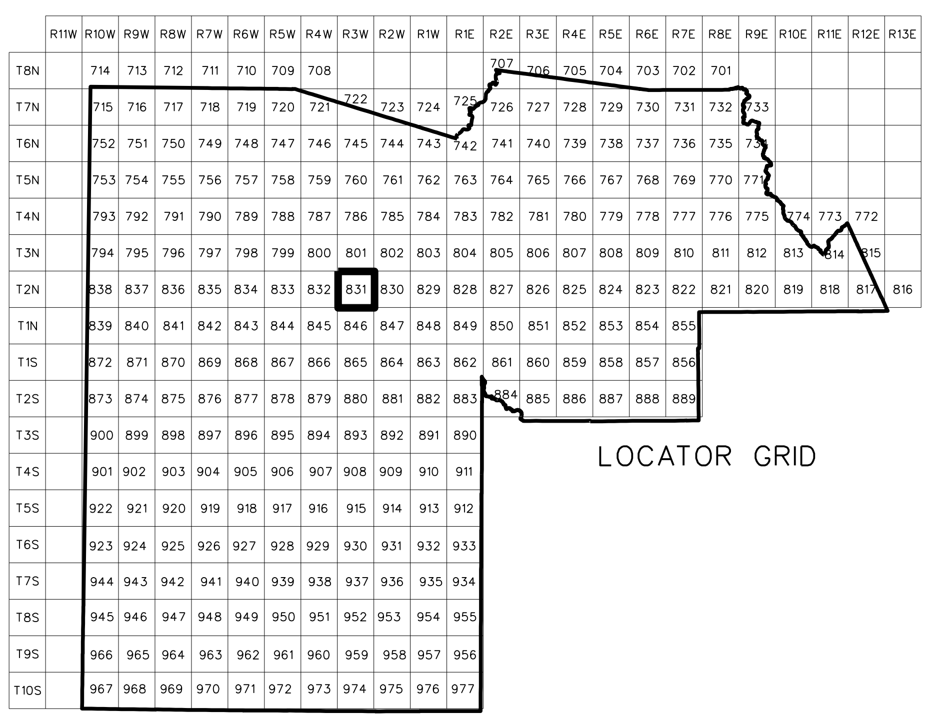

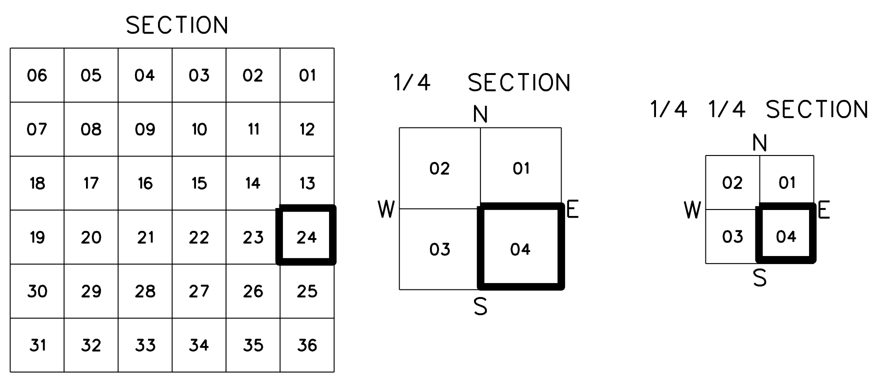

ASSESSOR BOOKS & MAPS WITHIN THIS AREA

BOOK: 502 MAP: 77
BOOK: 502 MAP: 78
BOOK: 502 MAP: 79
BOOK: 502 MAP: 82

SUBDIVISIONS

VERRADO PARCEL 5.703
MCR 641-41, 2004 SUB
VERRADO PARCEL 5.701
MCR 661-10, 2005 SUB
VERRADO PARCEL 5.704
MCR 666-21, 2005 SUB
VERRADO PARCEL 5.707
MCR 719-11, 2006 SUB

SCALE: 1'' = 100'

Maricopa County Assessor G.I.S.

01-13-2009

5027901

MARICOPA COUNTY ASSESSOR'S OFFICE
301 W. JEFFERSON ST.
PHOENIX, AZ 85003
www.maricopa.gov/assessor

LEGEND:

- Subdivision Boundary Line
- Subdivision Boundary Corner
- Street Centerline
- Street Centerline Marker
- Section Corner Marker
- Indicates change in original lot boundary
- Parcel Boundary Line
- Parcel Split Line
- 123-45-678A Parcel Number
- Z Parcel Boundary Tie-In

REVISION INFORMATION IS LOCATED ON A SEPARATE DOCUMENT

Disclaimer - Indemnification

Requester/Purchaser understands and agrees that Maricopa County does not guarantee the accuracy of the data and information requested and hereby expressly disclaims any responsibility for the truth, lack of truth, validity, invalidity, accuracy, inaccuracy of any said data and information. The parcel lines on maps are for illustration purposes only and are not intended to be used as a survey product.