MARICOPA COUNTY
OFFICIAL PARCEL MAP
STATE OF ARIZONA

PT. SECTION 04 T01N R04E

MAP ID # 852 - 04 - 03 - 04

TOWNSHIP & RANGE GRID NUMBER | SECTION NUMBER | 1/4 SECTION NUMBER | 1/4 1/4 SECTION NUMBER

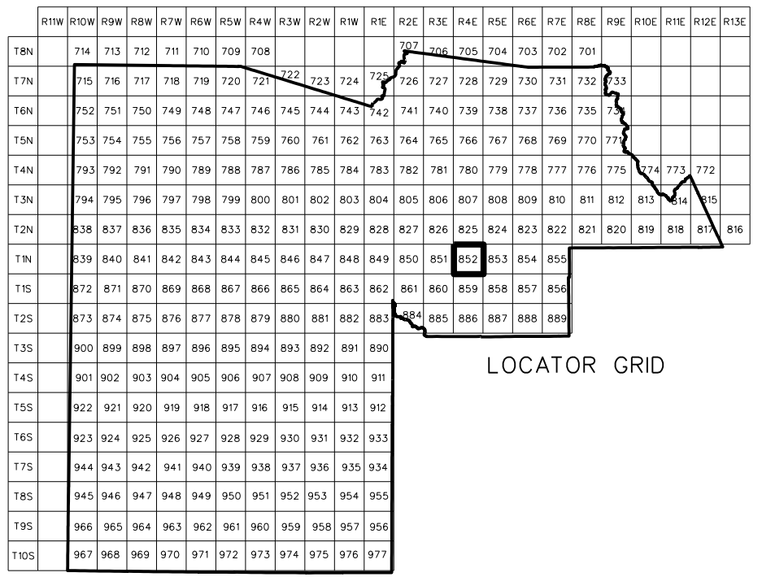

LOCATOR GRID

SECTION

06	05	04	03	02	01
07	08	09	10	11	12
18	17	16	15	14	13
19	20	21	22	23	24
30	29	28	27	26	25
31	32	33	34	35	36

1/4 SECTION

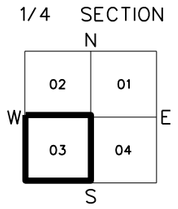

1/4 1/4 SECTION

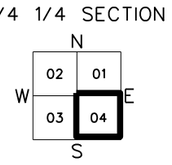

ASSESSOR BOOKS & MAPS WITHIN THIS AREA

BOOK: 124 MAP: 19
BOOK: 129 MAP: 37

SUBDIVISIONS

SCALE: 1" = 100'

N W E S

Maricopa County Assessor G.I.S.

01-26-2010

1293701

MARICOPA COUNTY ASSESSOR'S OFFICE
301 W. JEFFERSON ST.
PHOENIX, AZ 85003
www.maricopa.gov/assessor

LEGEND:

- Subdivision Boundary Line
- Subdivision Boundary Corner
- Street Centerline
- Street Centerline Marker
- Section Corner Marker
- Indicates change in original lot boundary
- Parcel Boundary Line
- Parcel Split Line
- 123-45-678A Parcel Number
- Z Parcel Boundary Tie-In

REVISION INFORMATION IS LOCATED ON A SEPARATE DOCUMENT

Disclaimer - Indemnification

Requester/Purchaser understands and agrees that Maricopa County does not guarantee the accuracy of the data and information requested and hereby expressly disclaims any responsibility for the truth, lack of truth, validity, invalidity, accuracy, inaccuracy of any said data and information. The parcel lines on maps are for illustration purposes only and are not intended to be used as a survey product.

129-37-007A
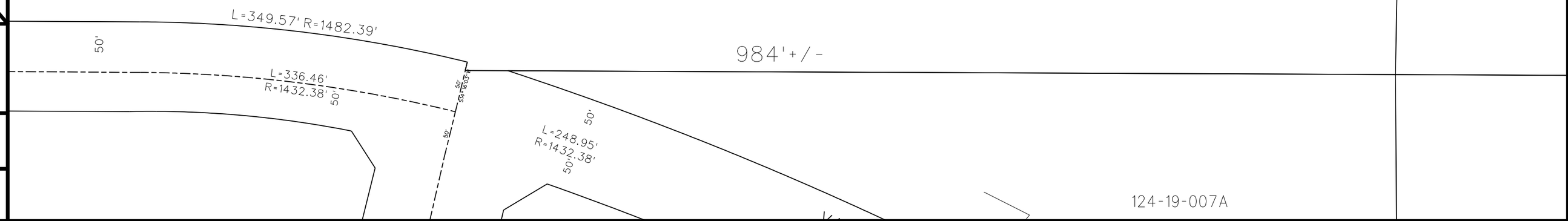
2640'+/-